Navy Brake - 87,600 Series
Exploded View Part Breakdown

Supplement to Master Plan N1-087-602-A & N1-087-602-B

General Information

- For part numbers and complete data, see Master Plan.
- For additional information and service instructions, see Sheet 8-078-927-00
- For general Navy Brake information, see Sheet 8-178-000-24.
- See back side for list of parts.

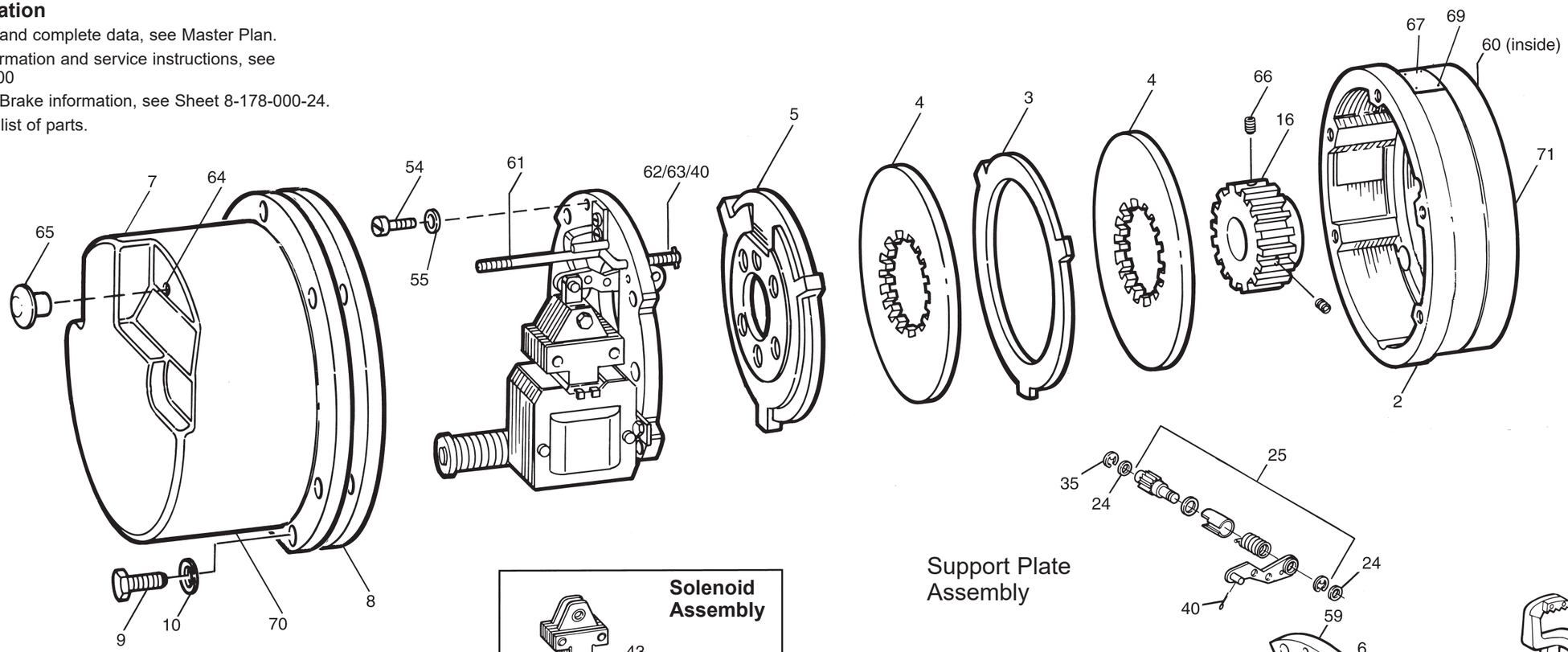

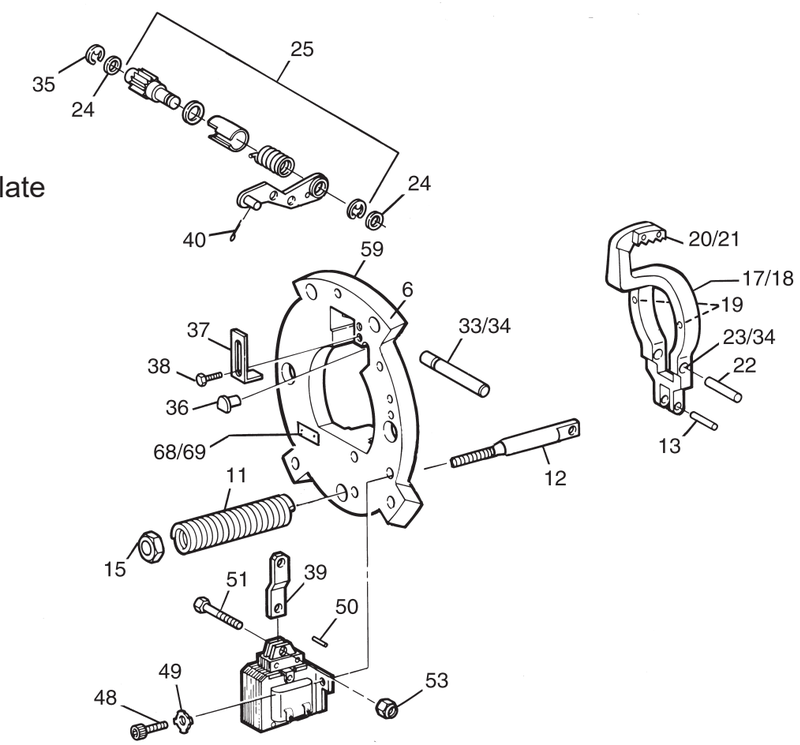

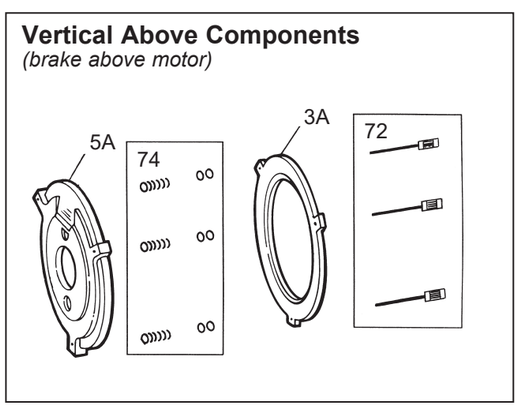

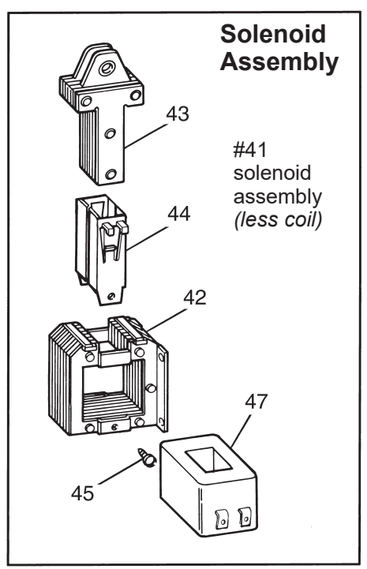

Copyright© 2003-2012 by Rexnord Corporation

Rexnord Corporation, Stearns Division, 5150 S. International Dr., Cudahy, WI 53110, (414) 272-1100 Fax: (414) 277-4364

Item No.	Description	Torque (lb-ft)	10	15	25	35	50	75	105
		Brake Model Number→	1-087-612-00	1-087-622-00	1-087-632-00	1-087-642-00	1-087-652-00	1-087-662-00	1-087-682-00
		Manufacturer's Part Number↓							
2	Endplate	8-002-785-01	1	1	1	1			
	Endplate	8-002-786-01					1	1	
	Endplate	8-002-787-01							1
3	Stationary disc	8-003-704-01					1	1	2
4	Friction disc	8-004-707-00	1	1	1	1	2	2	3
5	Pressure plate	8-005-703-01	1	1	1	1	1	1	1
6	Support plate	8-126-711-01	1	1	1	1	1	1	1
7	Housing	8-007-759-01	1	1	1	1	1	1	1
8	Gasket	8-069-707-00	1	1	1	1	1	1	1
9	Cap screw, hex head (3/8 - 16 x 1 1/4)	9-16-5220-00	7	7	7	7	7	7	7
10	Lock washer, spring (3/8)	9-45-0352-00	7	7	7	7	7	7	7
14	Washer	8-134-7030-01	1	7	4	3	4	3	3
11	Pressure spring - *(black) (formerly blue)*	9-70-2507-00	1						
	Pressure spring - *(white)*	5-66-3074-00		1					
	Pressure spring - *(orange)*	5-66-3076-00			1		1		
	Pressure spring - *(purple)*	5-66-3078-00				1		1	1
12	Pressure spring stud	8-152-703-01	1	1	1	1	1	1	1
13	Pivot pin *(spring stud)*	9-32-4059-00	1	1	1	1	1	1	1
15	Pressure spring nut	8-019-702-01	1	1	1	1	1	1	1
16, 66	Hub and set screw assembly	5-16-7107-00	1	1	1	1			
	Hub and set screw assembly	5-16-7108-00					1	1	
	Hub and set screw assembly	5-16-7109-00							1
17	Lever arm assembly	5-17-7707-00	1	1	1	1	1	1	1
18	Lever arm *(part of 17)*	8-017-703-03	1	1	1	1	1	1	1
19	Drive screw *(part of 17)*	9-32-3102-00	2	2	2	2	2	2	2
20	Sector gear *(part of 17)*	8-031-701-00	1	1	1	1	1	1	1
21	Straight pin *(part of 17)*	9-29-5014-00	2	2	2	2	2	2	2
22	Pivot pin *(lever arm)*	9-32-4059-00	1	1	1	1	1	1	1
23	Sleeve bearing	9-04-0101-01	1	1	1	1	1	1	1
24	Washer, flat	8-138-701-00	4	4	4	4	4	4	4
25	Solenoid lever and pinion assembly	5-32-7004-00	1	1	1	1	1	1	1
26	Solenoid lever *(part of 25)*	5-28-7009-00	1	1	1	1	1	1	1
28	Wrap spring *(part of 25)*	9-71-1001-00	1	1	1	1	1	1	1
29	Sleeve *(part of 25)*	8-054-701-00	1	1	1	1	1	1	1
30	Spacer *(part of 25)*	8-141-712-00	1	1	1	1	1	1	1
31	Pinion *(part of 25)*	8-032-702-00	1	1	1	1	1	1	1
32	Retaining ring *(part of 25)*	9-03-0015-00	1	1	1	1	1	1	1
33	Pivot pin *(solenoid lever)*	8-131-701-00	1	1	1	1	1	1	1
34	Sleeve bearing	9-04-0100-01	2	2	2	2	2	2	2
35	Retaining ring	9-03-0217-00	1	1	1	1	1	1	1
36	Stop *(solenoid lever)*	8-022-203-00	1	1	1	1	1	1	1
37	Stop *(wrap spring)*	8-076-710-01	1	1	1	1	1	1	1
38	Machine screw, round head (#10 - 24 x 1/2)	8-132-701-00	2	2	2	2	2	2	2
39	Solenoid link	8-013-710-00	1	1	1		1		
	Solenoid link	8-013-711-00				1		1	1
40	Cotter pin	9-31-4308-00	2	2	2	2	2	2	2
41	Solenoid frame *(less coil)*	5-12-0563-00	1	1	1		1		
	Solenoid frame *(less coil)*	5-12-0583-00				1		1	1
42	Solenoid assembly *(part of 41)*	5-79-0568-00	1	1	1		1		
	Solenoid assembly *(part of 41)*	5-79-0588-00				1		1	1
43	Solenoid plunger *(part of 41)*	5-29-5602-00	1	1	1		1		
	Solenoid plunger *(part of 41)*	5-29-0584-00				1		1	1
44	Coil holder *(part of 41)*	8-082-551-00	2	2	2		2		
	Coil holder *(part of 41)*	8-082-581-00				2		2	2
45	Plunger screw *(part of 41)*	9-25-7322-00	2	2	2		2		
	Plunger screw *(part of 41)*	9-25-9013-00				2		2	2

Item No.	Description	Torque (lb-ft)	10	15	25	35	50	75	105
		Brake Model Number→	1-087-612-00	1-087-622-00	1-087-632-00	1-087-642-00	1-087-652-00	1-087-662-00	1-087-682-00
		Manufacturer's Part Number↓							
47	Coil								
	115 V/60 Hz	6-5-61156-01	1	1	1		1		
	115 V/60 Hz	6-5-81156-01				1		1	1
	230 V/60 Hz	6-5-62306-01	1	1	1		1		
	230 V/60 Hz	6-5-82306-01				1		1	1
	440 V/60 Hz	6-5-64406-01	1	1	1		1		
	440 V/60 Hz	6-5-84406-01				1		1	1
	460 V/60 Hz	6-5-64606-01	1	1	1		1		
	460 V/60 Hz	6-5-84606-01				1		1	1
47	Coil kit *(includes items 44, 45, 56, 57 & 58)*								
	115 V/60 Hz	5-96-6601-05	1	1	1		1		
	115 V/60 Hz	5-96-6801-05				1		1	1
	230 V/60 Hz	5-96-6602-05	1	1	1		1		
	230 V/60 Hz	5-96-6802-05				1		1	1
	440 V/60 Hz	5-96-6604-15	1	1	1		1		
	440 V/60 Hz	5-96-6804-15				1		1	1
	460 V/60 Hz	5-96-6604-05	1	1	1		1		
	460 V/60 Hz	5-96-6804-05				1		1	1
48	Cap screw, socket head *(3/8 - 16 x 5/8)*	8-35-0016-01	3	3	3	3	3	3	3
49	Lock washer, belleville *(3/8)*	9-71-2081-00	3	3	3	3	3	3	3
50	Drive-lok pin, Type B	9-32-3101-00	1	1	1	1	1	1	1
51	Cap screw	8-157-702-00	1	1	1		1		
	Cap screw	8-157-703-00				1		1	1
53	Elastic stop nut	9-40-3730-00					1		
	Elastic stop nut	9-40-3732-00				1		1	1
54	Cap screw, socket head *(3/8 - 16 x 1 1/4)*	9-17-3220-00	5	5	5	5	5	5	5
55	Lock washer, spring *(3/8)*	9-45-1332-00	5	5	5	5	5	5	5
56	Lead wire and terminal assembly	5-39-0636-00	2	2	2	2	2	2	2
57	Machine screw, binding head *(#6 - 32 x 1/4)*	9-13-3017-00	2	2	2	2	2	2	2
58	Lock washer, spring *(#6)*	9-45-0326-00	2	2	2	2	2	2	2
59	Lead wire bushing *(support plate)*	8-140-003-02	1	1	1	1	1	1	1
60	Lead wire bushing *(endplate)*	8-140-002-06	1	1	1	1			
	Lead wire bushing *(endplate)*	8-140-002-08					1	1	
	Lead wire bushing *(endplate)*	8-140-002-10							1
61	Release rod	5-28-7006-00	1	1	1	1	1	1	1
62	Release spring	9-70-1107-00	1	1	1	1	1	1	1
63	Washer, flat	9-45-0170-00	1	1	1	1	1	1	1
64	Oil seal	9-02-0017-00	1	1	1	1	1	1	1
65	Release knob	8-148-703-00	1	1	1	1	1	1	1
67	Nameplate	8-078-061-00	1	1	1	1	1	1	1
68	Instruction plate	8-078-055-00	1	1	1	1	1	1	1
69	Drive screw, Type U	9-25-9002-00	6	6	6	6	6	6	6
70	Pipe plug *(drain)* 1/4"	9-33-0150-00	1	1	1	1	1	1	1
71	Oil seal	9-02-0081-00	1	1	1	1	1	1	1
72	Space heater *(optional)*	9-62-2028-00	1	1	1	1	1	1	1
74	Cap screw, hex head	9-16-4810-00	2	2	2	2	2	2	2
75	Lock washer, #10 conical	9-46-0009-00	2	2	2	2	2	2	2
	Support plate assembly *(less coil)*	5-42-7111-00	1						
	Support plate assembly *(less coil)*	5-42-7113-00		1					
	Support plate assembly *(less coil)*	5-42-7115-00			1		1		
	Support plate assembly *(less coil)*	5-42-7117-00				1		1	1
Vertical Above Modification									
72	Pin Kit 1 Disc	8-061-711-00	3	3	3	3			
	2 Disc	8-061-712-00					3	3	
	3 Disc	8-061-713-00							3
74	Spring Kit	5-66-3171-00	1	1	1	1	1	1	1
3A	Stationary Disc Horizontal/Vertical	8-003-704-01					1	1	2
5A	Pressure Plate Vertical	8-005-703-04	1	1	1	1	1	1	1